Access Reader G2

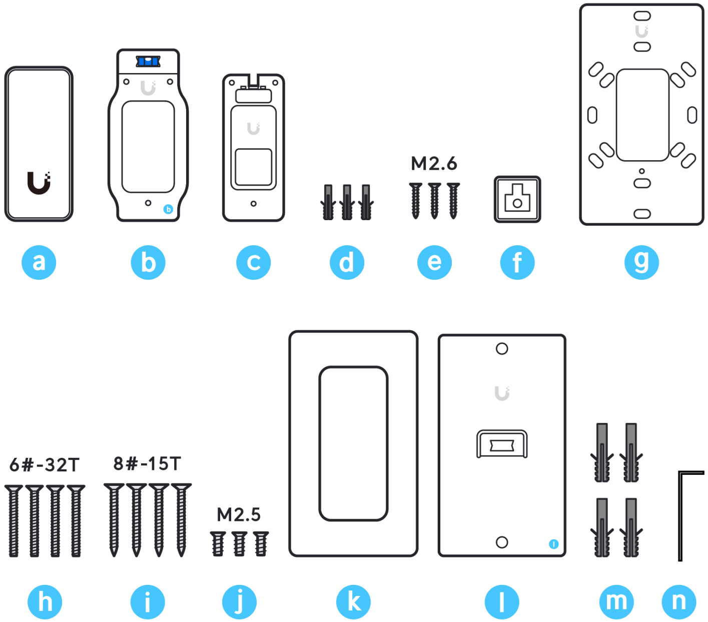
M2.6
a
b
c
d
e
f
g
6#-32T
8#-15T
M2.5
h
i
j
k
l
m
n

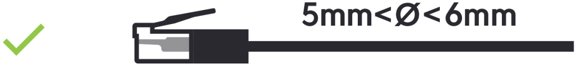

✕

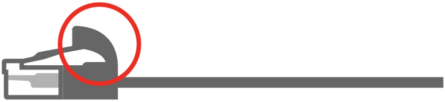

✕

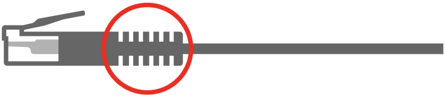

1

A

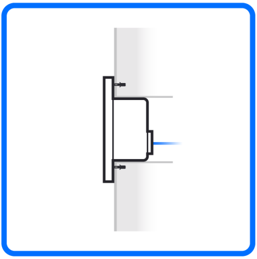

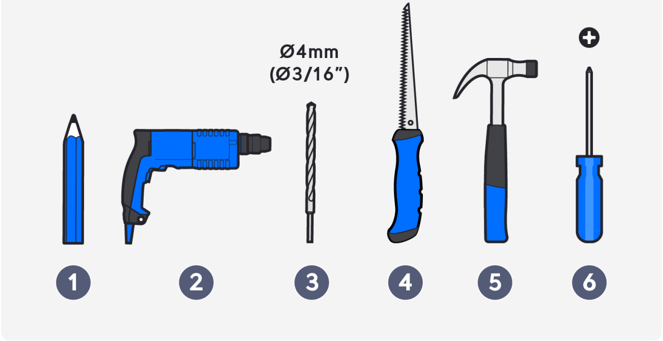
Ø4mm
(Ø3/16")
1
2
3
4
5
6

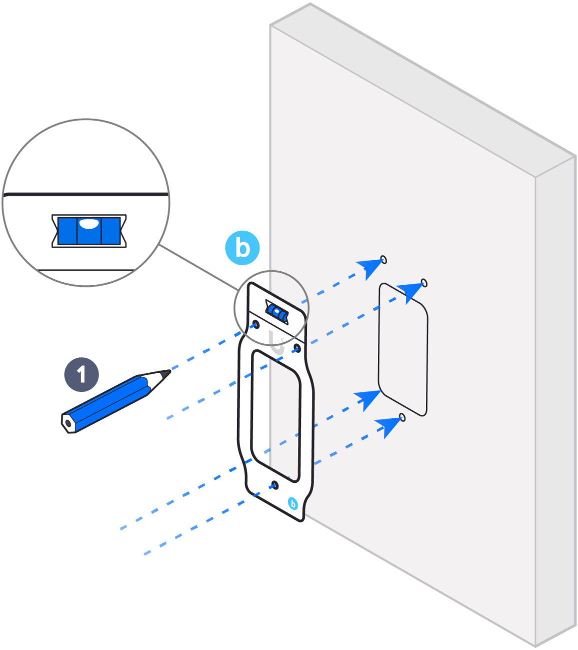

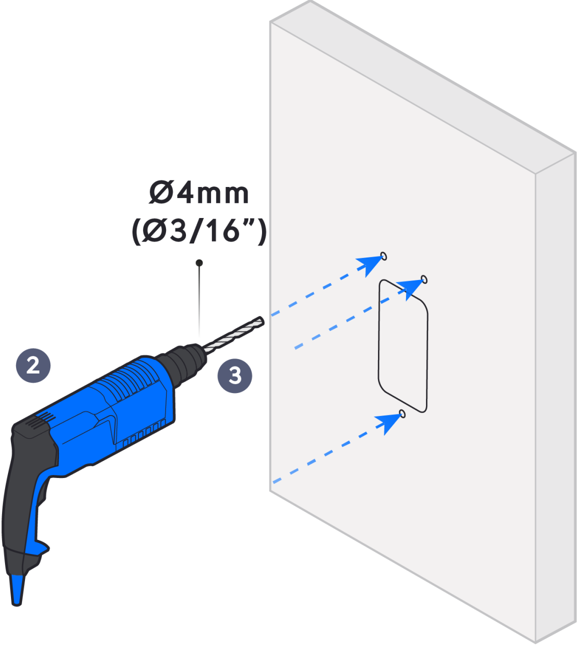
Ø4mm
(Ø3/16”)
2
3

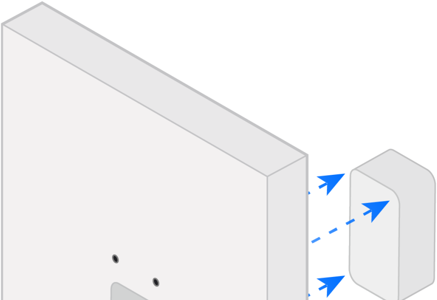

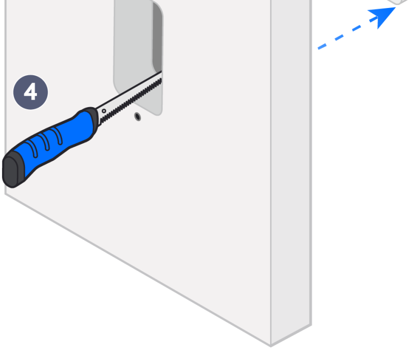

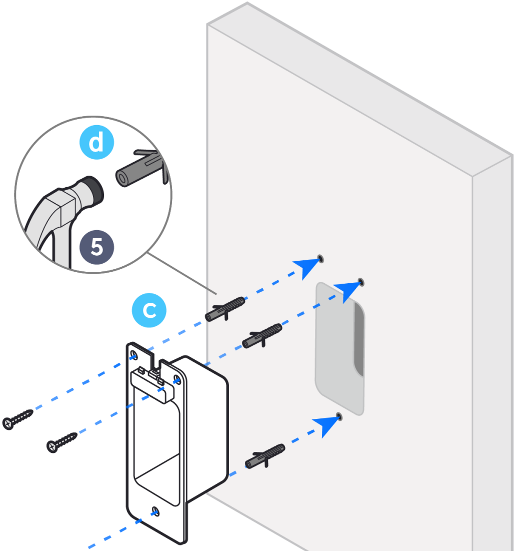

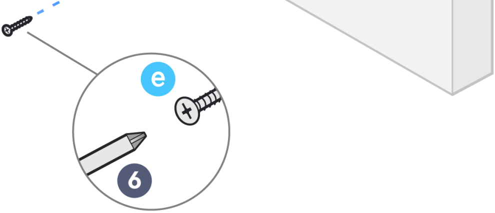

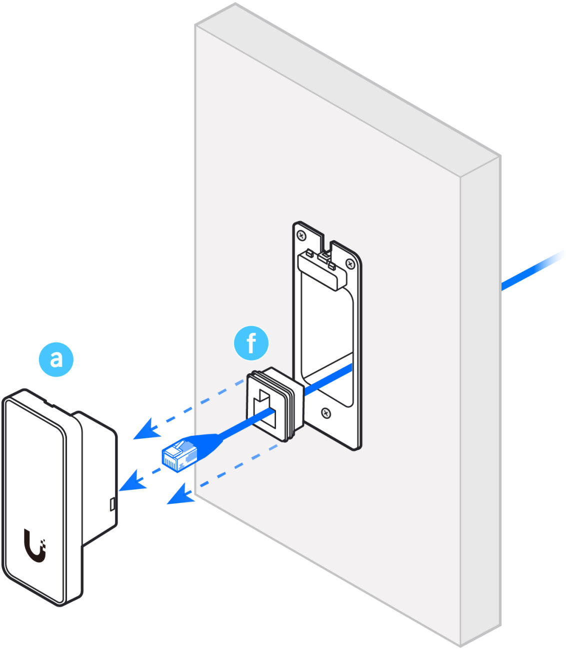

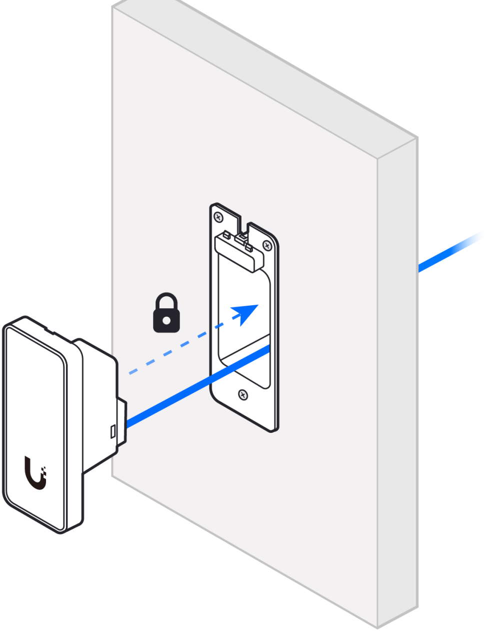

B

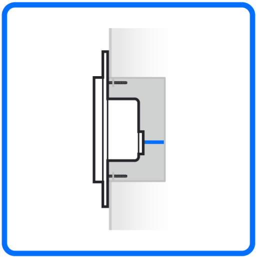

⊕

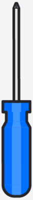

1

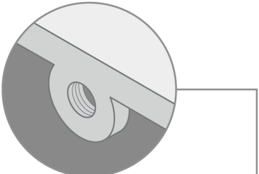

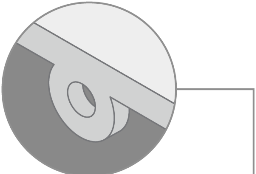

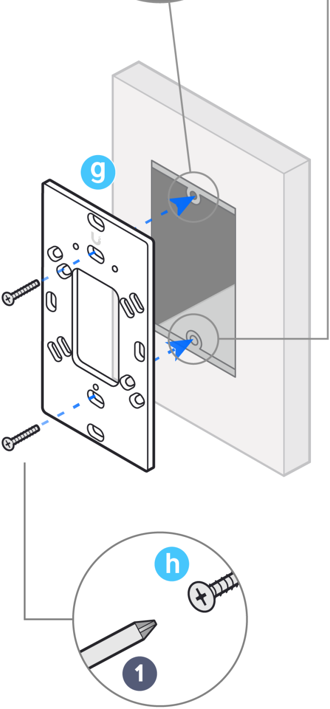

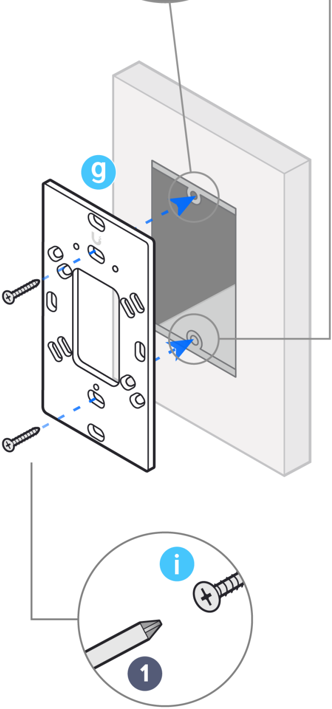

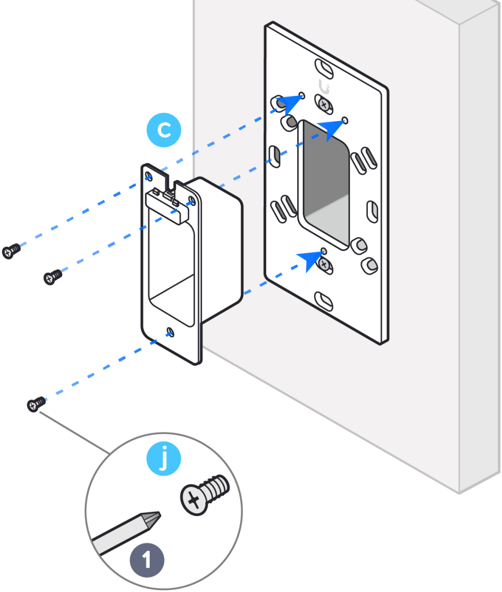

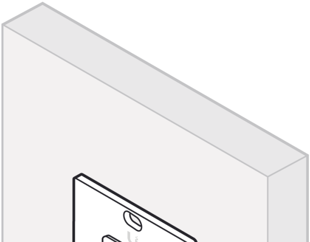

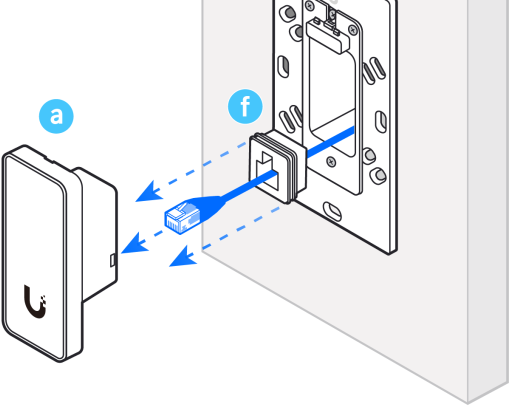

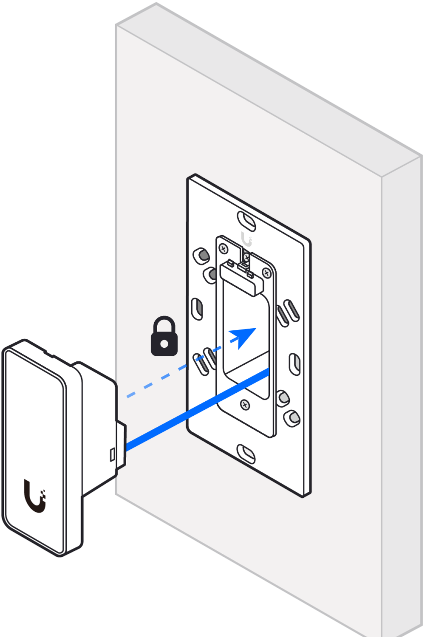

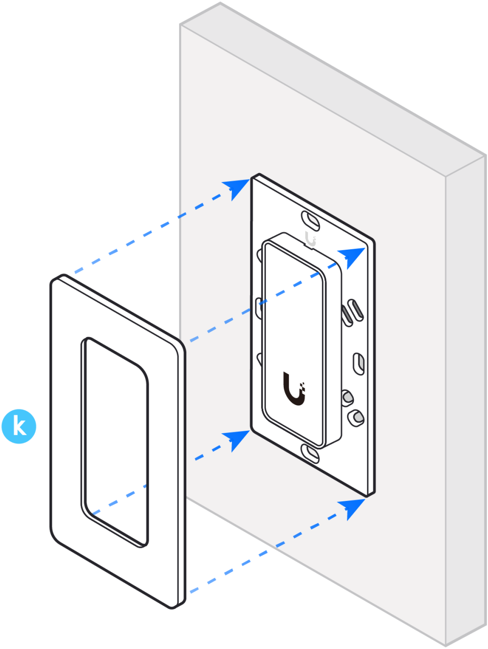

C

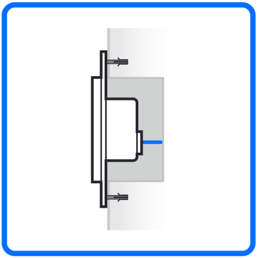

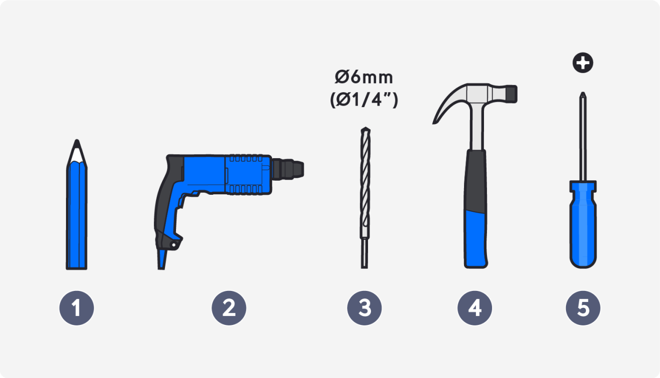
Ø6mm
(Ø1/4")
1
2
3
4
5

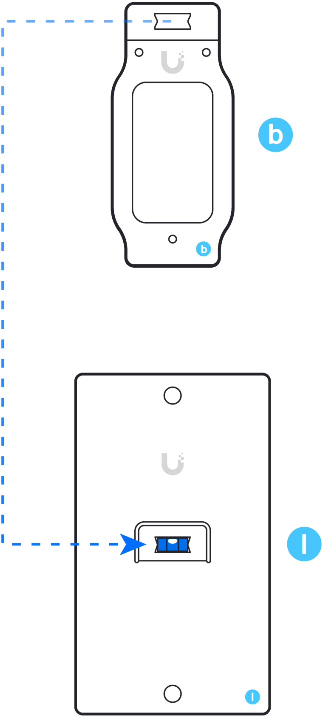

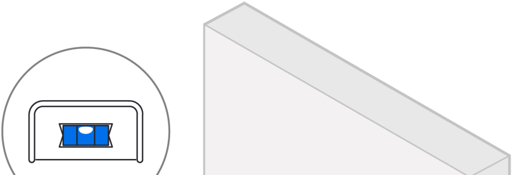

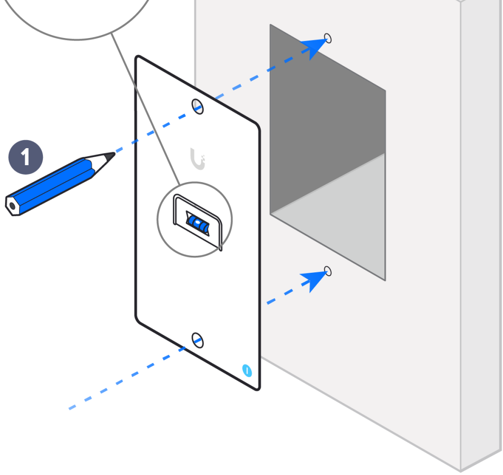

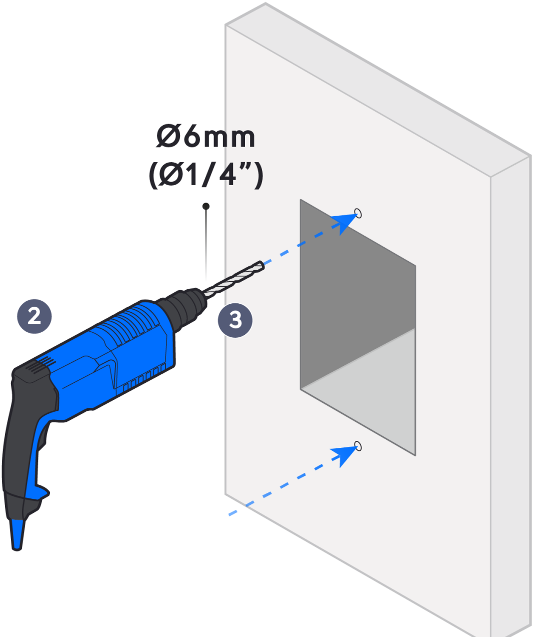

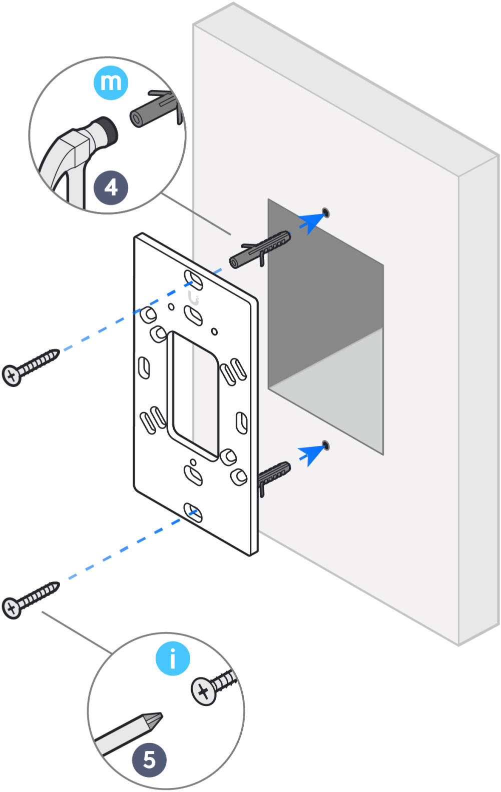

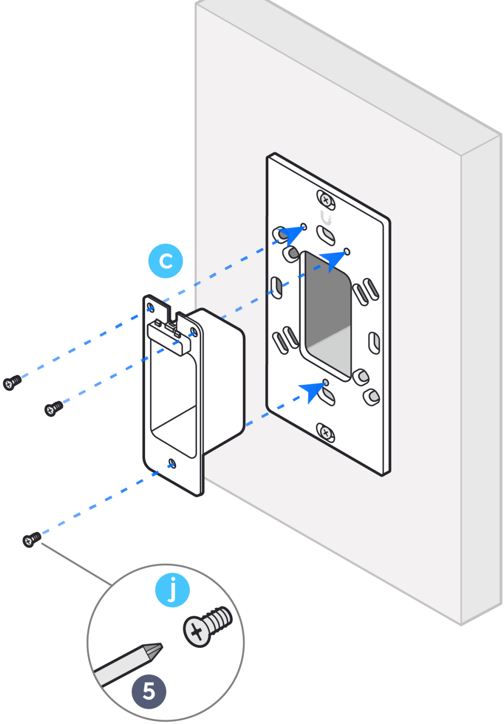

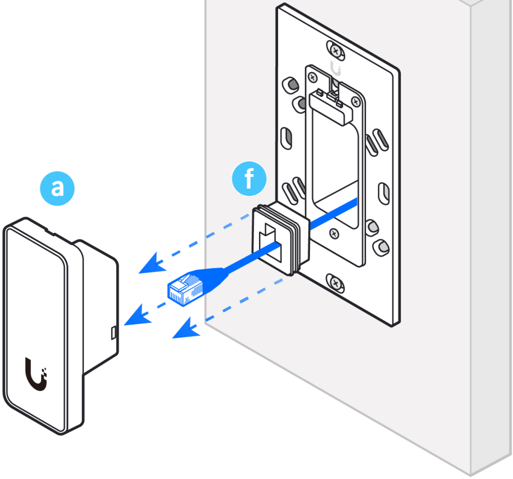

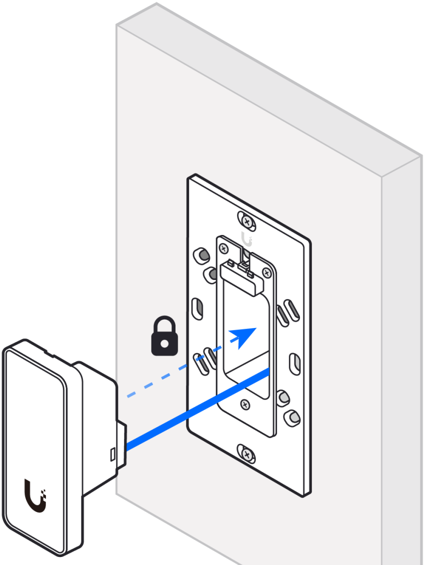

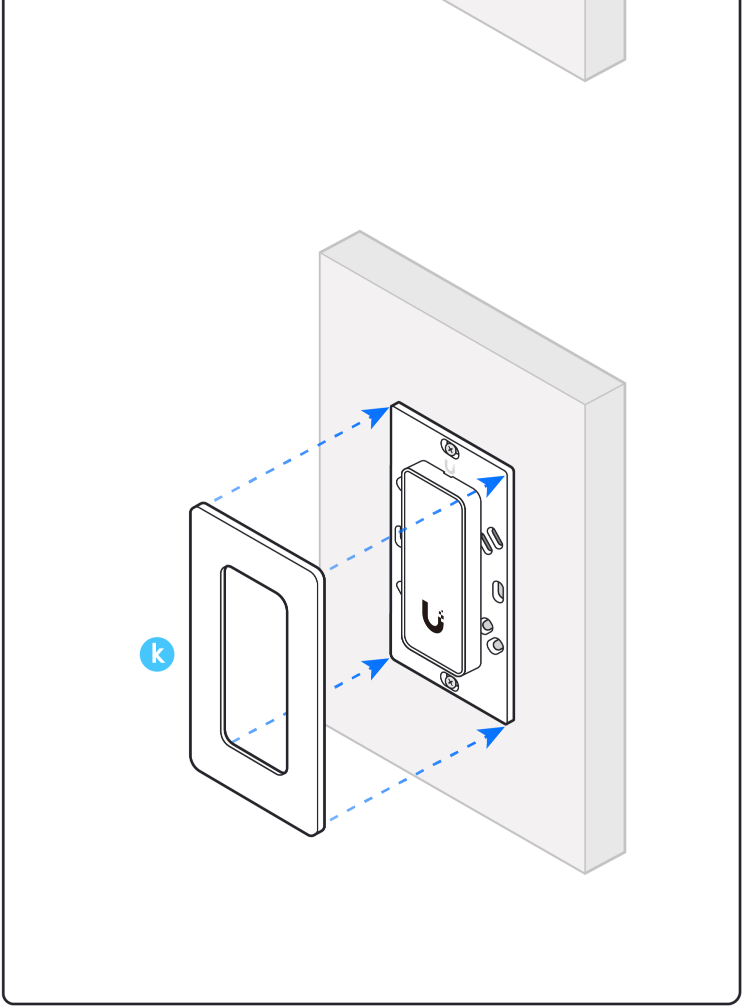

2

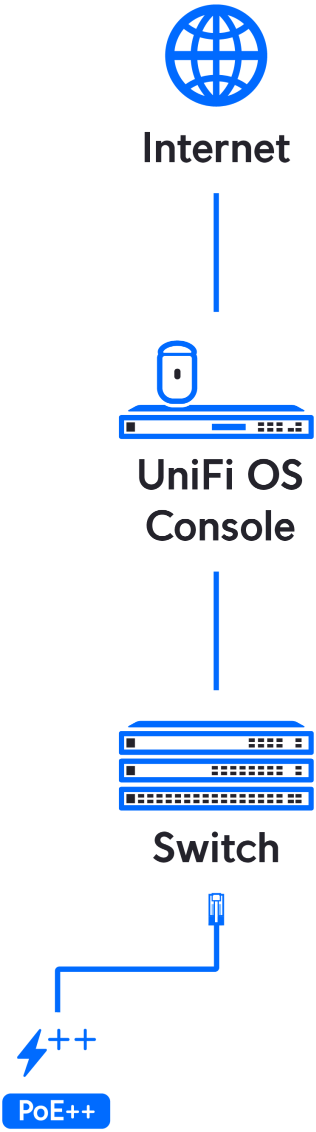
Internet
UniFi OS Console
Switch
PoE++

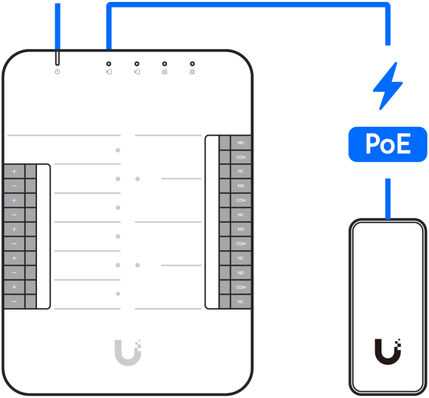
PoE
NO
COM
NC
+
−

3

Download on the App Store

GET IT ON Google Play

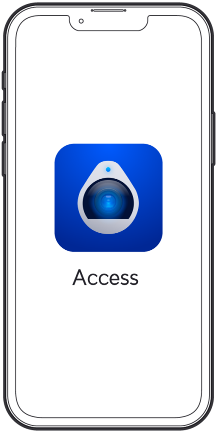

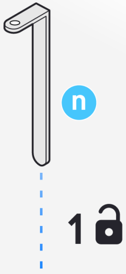

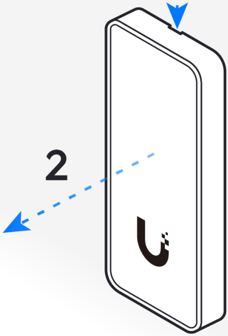

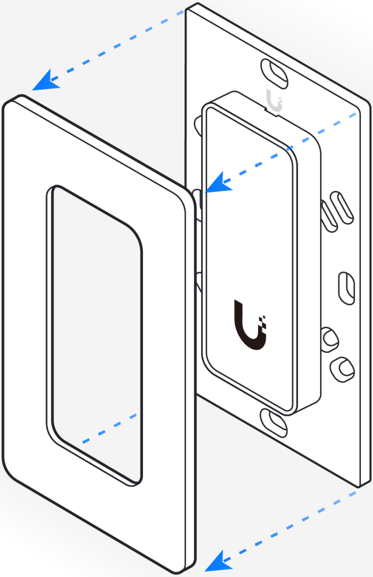

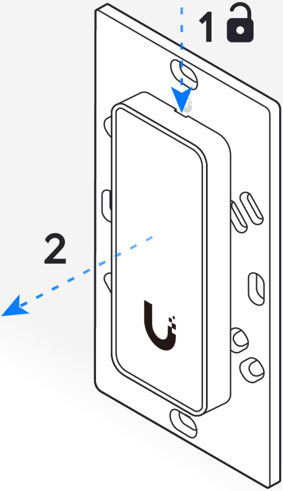

If you need further assistance, visit our Help Center or contact Ubiquiti Support.

©2022 Ubiquiti Inc. All rights reserved. Ubiquiti, Ubiquiti Networks, the Ubiquiti U logo, UniFi, and UniFi Connect are trademarks or registered trademarks of Ubiquiti Inc. in the United States and in other countries. App Store and the Apple logo are trademarks of Apple Inc., registered in the U.S. and other countries. Google Play and the Google Play logo are trademarks of Google LLC. All other trademarks are the property of their respective owners.